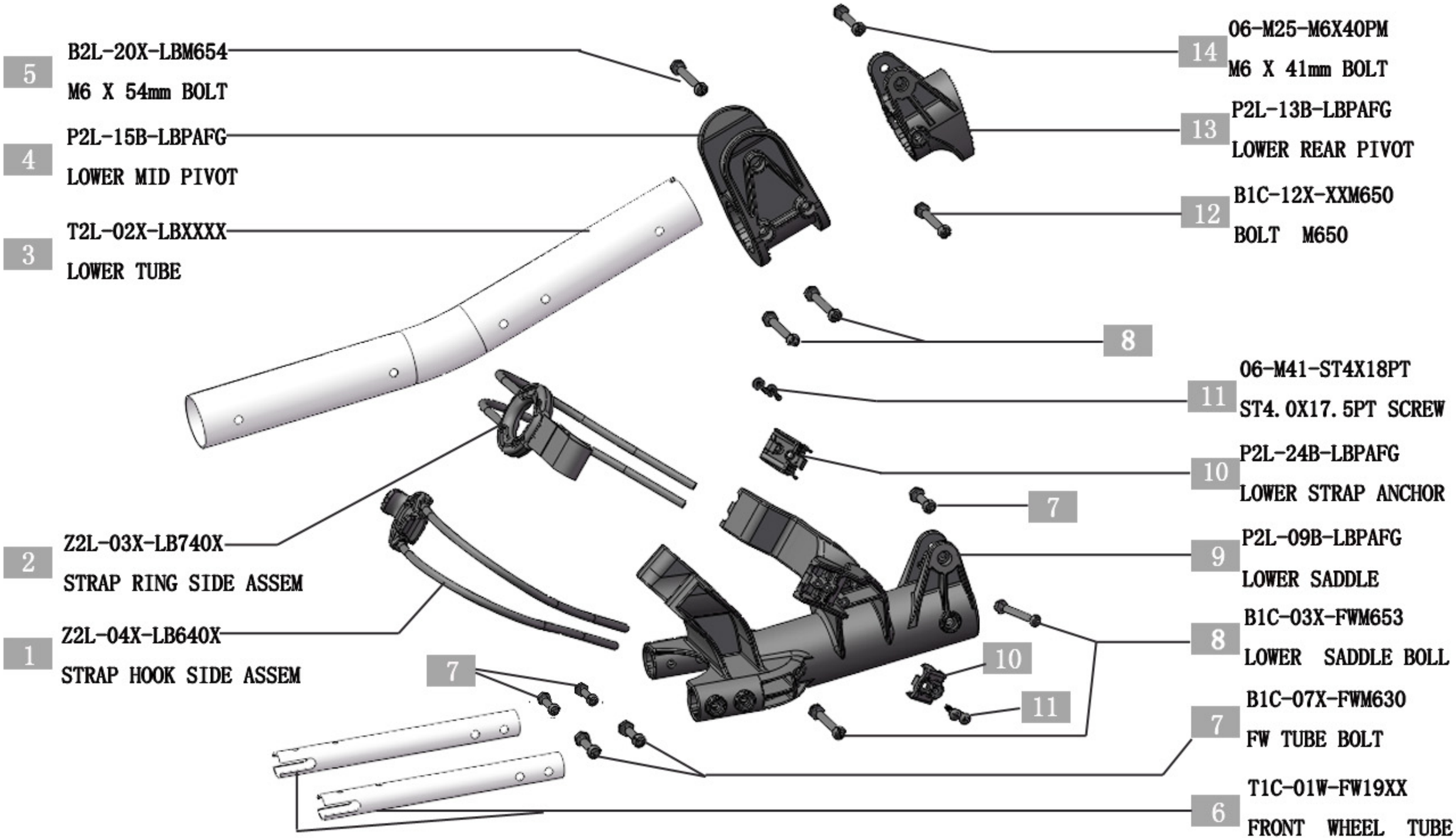LOWER BAG SUPPORT