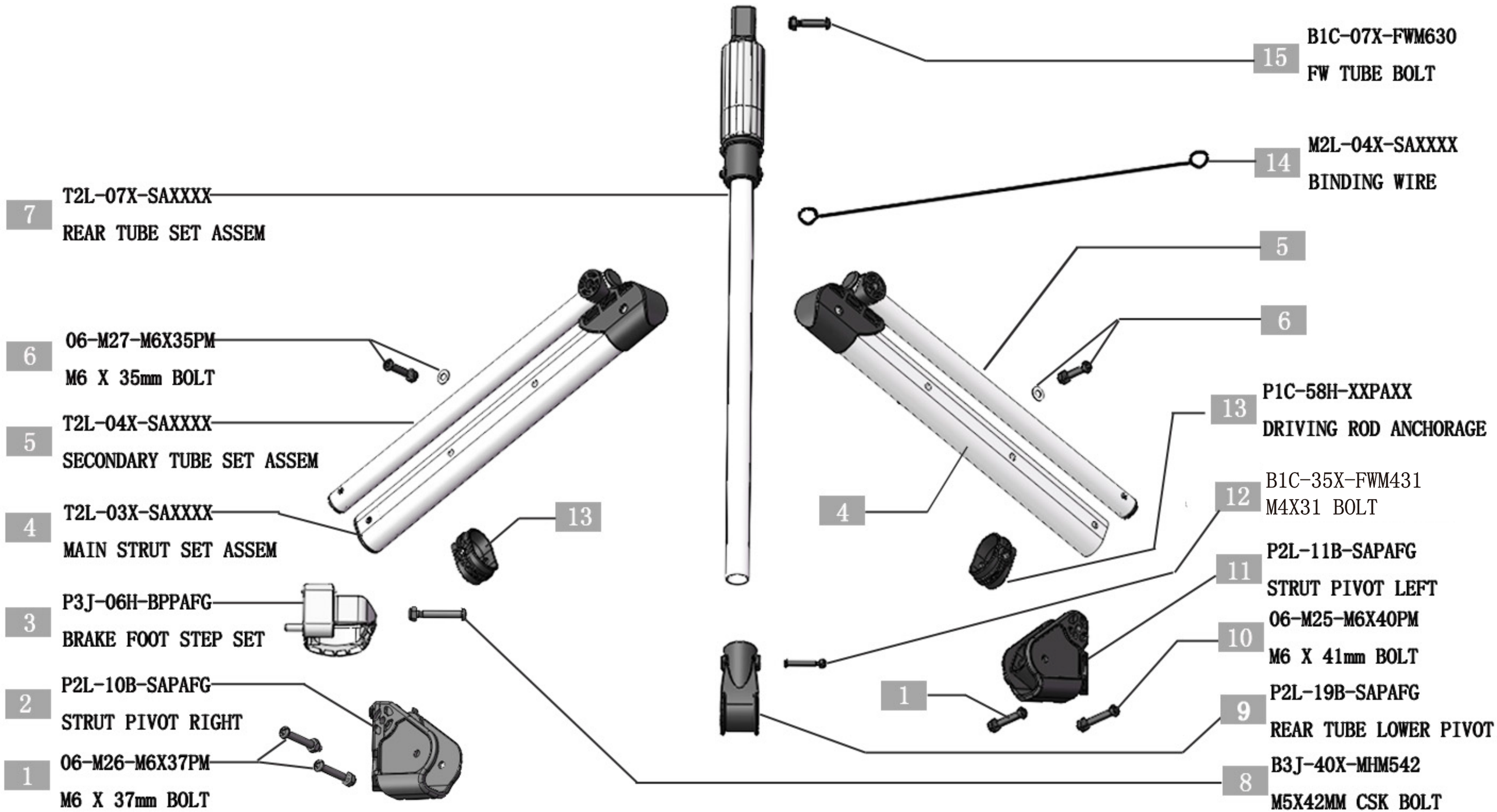STRUT ASSEMBLY